WATKINS-JOHNSON CO.
PALO ALTO, CALIFORNIA

BULK RATE
U.S. POSTAGE
PAID
PERMIT NUMBER
317
SUNNYVALE
CALIFORNIA

WATKINS-JOHNSON

Manufacturing and Office Locations

United States

SALES OFFICES

CALIFORNIA
Watkins-Johnson
3333 Hillview Avenue
Palo Alto 94304
Telephone: (415) 493-4141

Watkins-Johnson
831 South Douglas Street
Suite 131
El Segundo 90245
Telephone: (213) 640-1980

DISTRICT OF COLUMBIA
Watkins-Johnson
700 Quince Orchard Road
Gaithersburg, Md. 20760
Telephone: (301) 948-7550

FLORIDA
Watkins-Johnson
325 Whooping Loop
Altamonte Springs 32701
Telephone: (305) 834-8840

MARYLAND
Watkins-Johnson
700 Quince Orchard Road
Gaithersburg 20760
Telephone: (301) 948-7550

MASSACHUSETTS
Watkins-Johnson
5 Militia Drive
Suite 11
Lexington 02173
Telephone: (617) 861-1580

NEW JERSEY
Watkins-Johnson
90 Monmouth Street
Suite 207
Red Bank 07701
Telephone: (201) 842-2422

OHIO
Watkins-Johnson
2500 National Road
Suite 200
Fairborn 45324
Telephone: (513) 426-8303

TEXAS
Watkins-Johnson
9216 Markville Drive
Dallas 75243
Telephone: (214) 234-5396

International

ITALY
Watkins-Johnson Italiana
S.p.A.
Piazza G. Marconi 25
00144 Roma-EUR
Telephone: (6) 59 45 54
Telex: 63278
Cable: WJROM-ROMA

GERMANY, FEDERAL REPUBLIC OF
Watkins-Johnson
Manzingerweg 7
8000 Muenchen 60
Telephone: (089) 836011
Telex: 529401
Cable: WJDBM-MUENCHEN

UNITED KINGDOM
Watkins-Johnson
Shirley Avenue
Windsor, Berkshire SL4 5JU
Telephone: (7535) 69241
Telex: 847578
Cable: WJUKW-WINDSOR

The Watkins-Johnson Tech-notes is a bi-monthly periodical circulated to educational institutions, engineers, managers of companies or government agencies, and technicians. Individuals may receive issues of Tech-notes by sending their subscription request on company letterhead, stating position and nature of business to the Editor, Tech-notes, Palo Alto, California. Permission to reprint articles may also be obtained by writing the Editor.

Printed in U.S.A.

Tech-notes

Vol. 6 No. 4 July/August 1979

Antenna Polarization

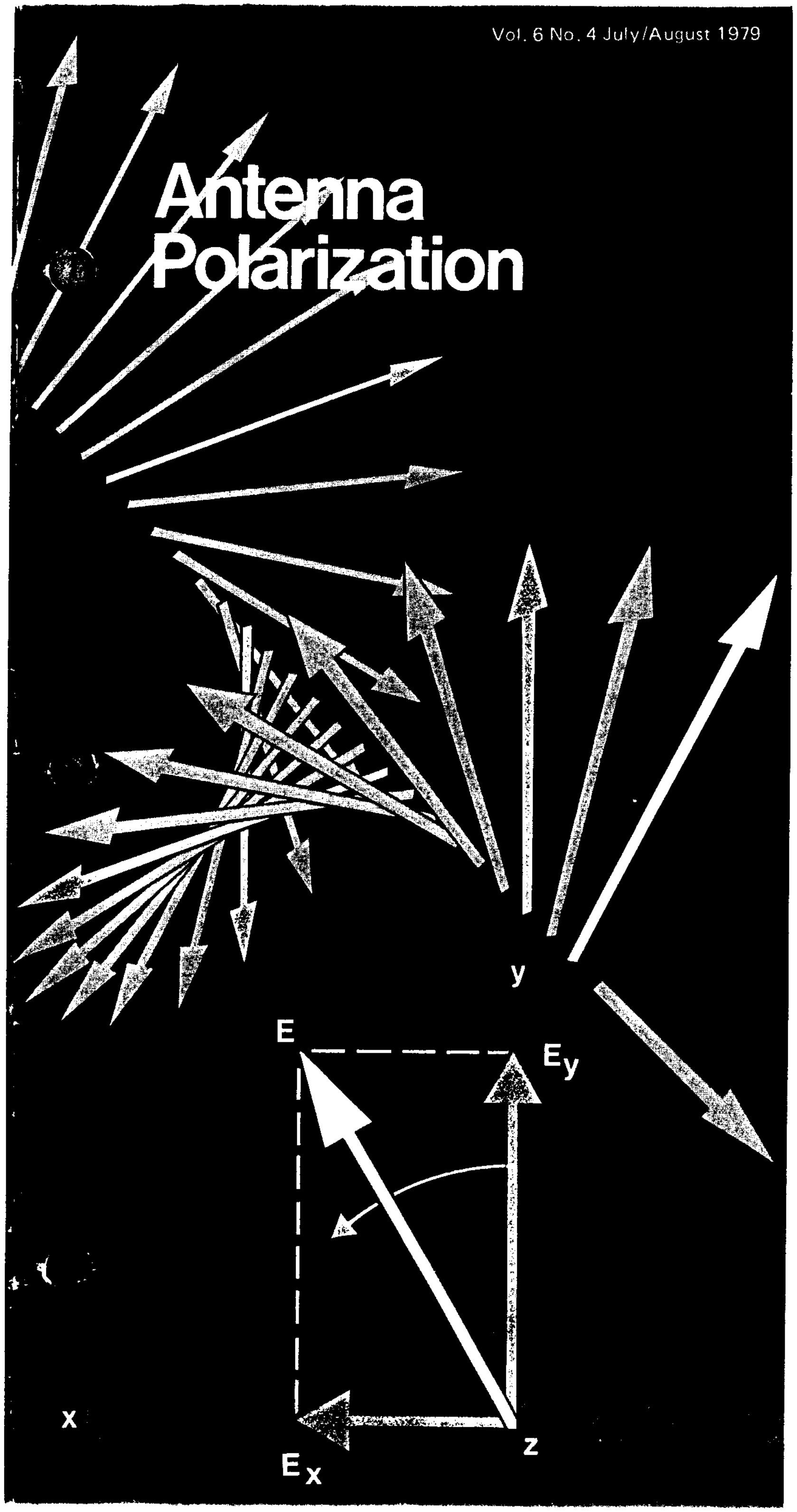

Antennas are transducers through which electromagnetic (radio) waves are coupled from transmitters to space and from space to receivers. Some of an antenna's significant radiation parameters are gain, beamwidth, field strength, phase and polarization. The purpose of this article is to discuss the polarization parameter and to present some examples of antennas and their associated polarization characteristics.

The polarization of an antenna in a given direction is the polarization of the wave radiated by the antenna in that direction. Alternatively, it is the polarization of a wave incident from the given direction which results in maximum available power at the antenna terminals. "Given direction" is usually the direction of maximum gain of the antenna.

A radio wave may be considered to consist of two orthogonal vectors representing the electric and magnetic fields, and a third vector, orthogonal to the first two, representing the direction of propagation. It is conventional in electrical engineering practice to specify the polarization of the wave by the orientation of the electric field vector, as illustrated in Figure 1. For the purpose of this discussion, it is not necessary to further discuss the magnetic field vector because it is always oriented in the same way with respect to the electric field vector. If the orientation of the E vector does not deviate from a straight line as it appears to move in the direction of propagation, the wave is linearly polarized. If the E vector appears to rotate with time, then the wave is elliptically polarized. The ellipse so described may vary in ellipticity from a circle to a straight line, or from circular to linear polarization. In a general sense, then, all polarizations may be considered to be elliptical. In engineering practice, linear polarization and circular polarization conform to precise definitions, but elliptical polarization is sometimes called circular polarization, with a tolerance added to define the permissible ellipticity. Figure 2 is an illustration of a circularly-polarized wave with the radial lines representing the successive E vectors along the direction of propagation. If a smooth curve is drawn connecting the tips of the successive vectors, a helix is formed. The sense of polarization, either right-hand or left-hand, is derived from the apparent rotation of the vectors. When the thumb is placed along the direction of propagation, the fingers will point in the direction of the apparent rotation of the vectors as they seem to pass through a plane. The polarization is, then, named for the hand, right or left, whichever is appropriate.

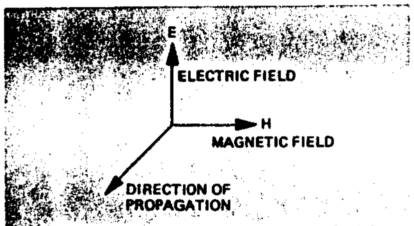

Figure 1. Electromagnetic field.

Linearly-Polarized Antennas

Antennas designed to radiate and receive linearly-polarized waves are numerous, but the origins of all can be traced to two basic types: the dipole and its complement, the slot antenna. The polarization of the wave radiated by the dipole is oriented along the long dimension of the dipole, whereas the polarization of the slot antenna is oriented across the short dimension. The dipole evolves into such antennas as monopoles, log-periodic dipole arrays, yagis, and others. The horn antenna can be considered an evolutionary product of the slot antenna. The main concern in this article, however, is circularly-polarized antennas.

Circularly-Polarized Antennas

Antennas designed for circular polarization are generally more complex than those used for linear polarization. Circularly-polarized antennas may be divided into two general categories.

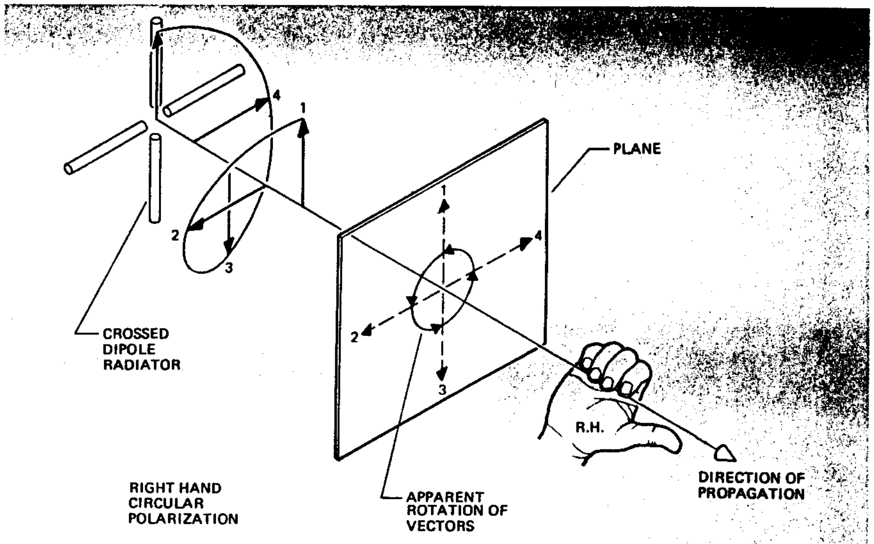

Figure 2. Field rotation of circular polarization.

Category I antennas are those which are circularly polarized by virtue of the physical structure of their radiating aperture, and are exemplified by such antennas as spirals and helices. This type of antenna produces that sense of circular polarization, right or left, which corresponds to the screw sense of the helix or spiral.

Category II antennas usually consist of orthogonal elements which are combined in phase quadrature. An example of a category II antenna is the crossed dipole with an external 90-degree hybrid coupler. This type of antenna, and also the dual-polarized horn antenna, is capable of producing both right-hand and left-hand circular polarization simultaneously. A variety of category I and category II antennas are illustrated in Figures 3A and 3B.

It is not necessarily obvious from the external appearance of a circularly polarized antenna that it is, in fact, circularly polarized. Even experienced antenna engineers may have difficulty in determining an antenna's polarization solely by observing its physical appearance. Both time and space (phase and position) dictate type of polarization, and it is difficult to mentally relate these factors to an antenna's physical structure. Some of the antennas shown in Figures 3A and 3B show the rotational sense of polarization. Those antenna illustrations not showing a defined sense of circular polarization indicate that polarization sense is determined by external factors or characteristics that cannot be easily depicted in the diagrams.

Time and Space Quadrature

The terms "time and space quadrature" may also be used to describe the essential relationship between the successive vectors required to produce circular polarization. If the radiating antenna provides these two necessary ingredients to the wave, circular polarization results. With category II antennas, space quadrature is usually provided by the orientation of the radiating elements, such as the orthogonal arms of a crossed dipole. Time quadrature can be provided by an

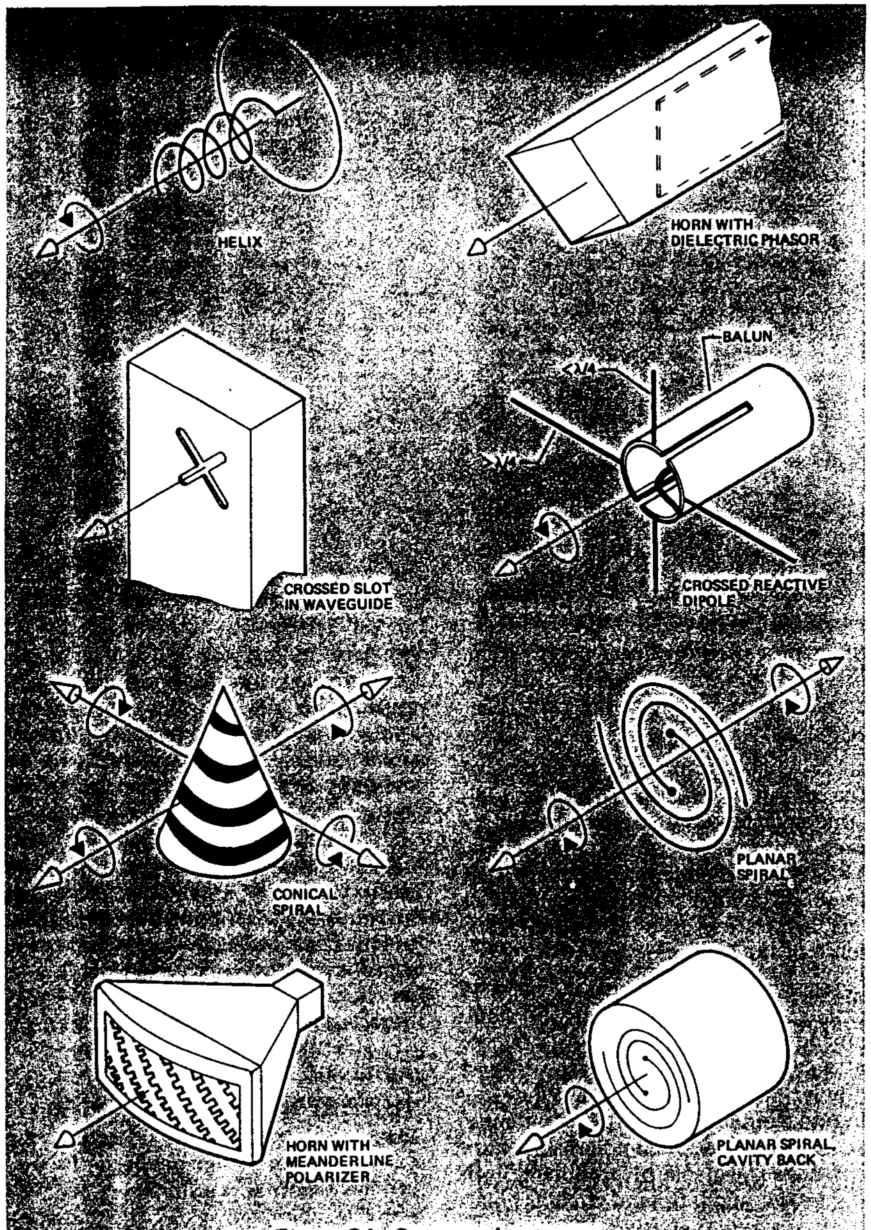

Figure 3A. Category I antennas.

external device which retards phase by 90°, such as the 90° transmission line or the external hybrid coupler of the crossed dipole.

Category I antennas, such as spirals, perform both functions within the radiating elements. Other types of category I antennas (the reactive dipole and the meanderline polarizer) depend on reactive effects in the radiating elements to provide the phase (time) relationships, with the space quadrature still resulting from the element orthogonal arrangement. A radiating element less than λ/4, exhibits capacitive reactance, and a radiating element greater than λ/4 exhibits inductive reactance. With capacitive reactance, current lags voltage; with inductive reactance, current leads voltage. The net result is that the phase relationship of the currents on the orthogonal arms are modified by these different reactances, and can produce the time quadrature required for circular polarization.

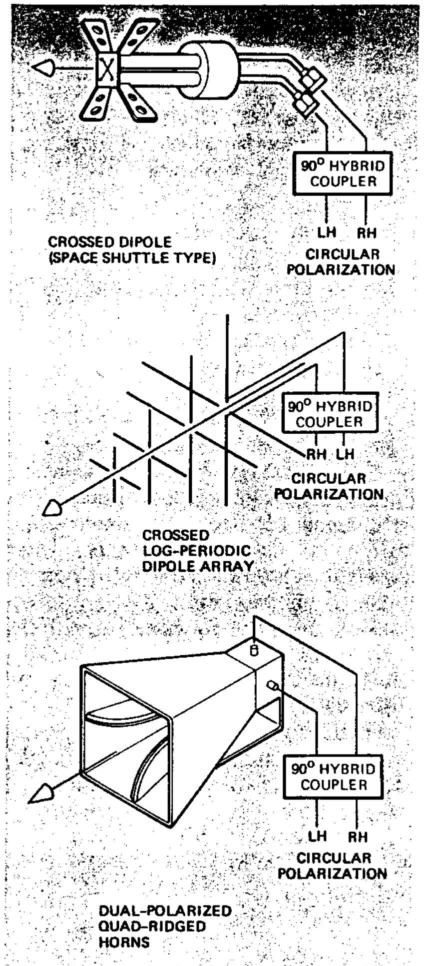

Figure 3B. Category II antennas.

Polarization Diversity

It is possible, with a dual-polarized antenna connected in the system shown in Figure 4, to selectively

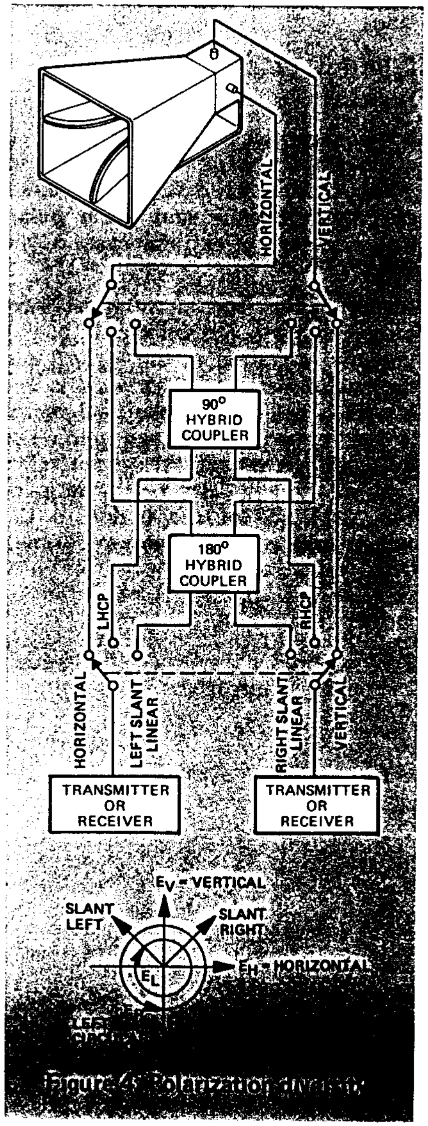

Figure 4. Polarization diversity.

receive or transmit any of the six major polarizations and, further, to transmit or receive any two orthogonal polarizations simultaneously if dual transmitters or receivers are available. This latter arrangement is called a polarization diversity system, which is particularly useful when it is imperative to maintain communications during changing polarization conditions, or when the need occurs to estimate the polarization of a received signal by comparing received amplitudes.

Elliptical Polarization and Axial Ratio

While the discussion has emphasized circular polarization, it is *elliptical* polarization which is the most general case, with circular and linear polarization being but extreme cases of the ellipse.

Figure 5 illustrates an elliptical wave produced by a crossed dipole having unequal excitation of the vertical and horizontal elements. This wave is one in which the locus of the field vector is a deformed or flattened helix. The *axial ratio* is a qualitative term referring to the ellipticity or the ratio of the amplitude of the major to the minor axes of the ellipse so formed. This ratio varies between infinity (linear) and 1 (circular). β is the tilt angle of the ellipse.

Let us consider the situation in which a category II antenna, a crossed dipole, for example, is connected by means of an external 90° hybrid coupler to produce circular polarization. If the orthogonal arms of the dipole are indeed driven with equal amplitude signals differing by 90° in phase, a circularly polarized wave will be produced. However, if either the amplitude or phase do not differ by exactly 90°, elliptical polarization will be produced.

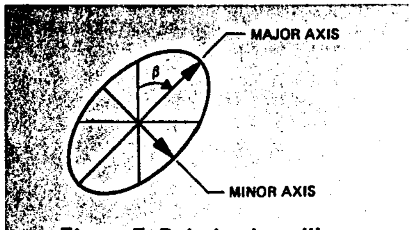

Figure 5. Polarization ellipse.

The graph presented in Figure 6 yields the axial ratio of the ellipse when entered with the amplitude and phase errors known to exist at the antenna ports of the hybrid coupler. If the amplitude error is such that all energy is delivered to one port, then the value of the axial ratio is infinity (linear polarization). If the phase error is 90°, the axial ratio also becomes infinity, but this linear polarization is inclined 45° from the linear polarization of the first instance. Intermediate values of axial ratio may be taken from the graph. The graph was created from the following equation*:

$$\text{Axial Ratio} = \frac{1+\Delta^2+[(1-\Delta^2)^2+(2\Delta\sin\epsilon)^2]^{1/2}}{[(1+\Delta^2)^2-(1-\Delta^2)^2+(2\Delta\sin\epsilon)^2]^{1/2}}$$

where:

Δ = amplitude error ratio

ϵ = phase error, degrees

Polarization Reference

Early antennas were earthbound; therefore, the terms vertical and horizontal polarization were adequate, for earth was always the reference. With antennas on aircraft and spacecraft, an independent reference system is required. Figure 7 shows the accepted coordinate system for antennas not referenced to earth. The cardinal linear polarizations are termed Eθ (theta) and Eϕ (phi). If the space shuttle shown in the coordinate system were physically located on earth, then Eθ is equivalent to vertical, and Eϕ to horizontal polarization, when propagation is in the x direction, or θ=90°, ϕ=0°. For propagation in the Z direction (θ=0), however, ϕ is not defined with respect to the Z-direction. In this case, polarization is determined by the alignment of the E vector with respect to the ϕ lines. If aligned along the ϕ=0°, ϕ=180° lines, polarization is Eθ, or "vertical." If aligned along ϕ=90°, ϕ=270°, polarization is Eϕ, or horizontal.

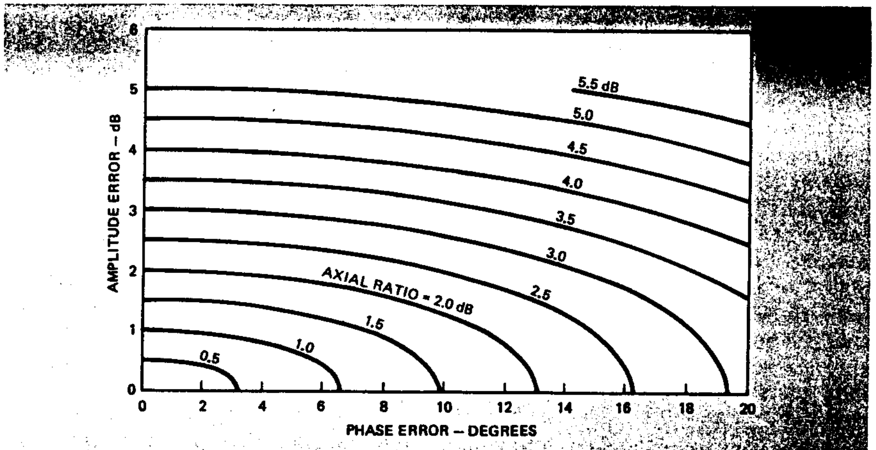

Figure 6. Axial ratio can be determined from phase and amplitude errors.

Polarization and Reflection

The components of a wave reflected from a conductive surface undergo a

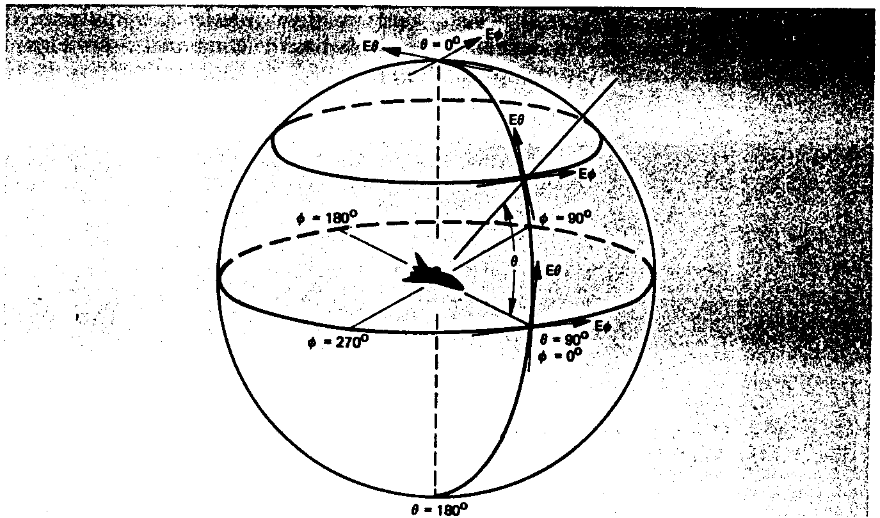

Figure 7. Coordinate system.

---

*The equation and graph were developed by E.K. Okubo, Lockheed Missiles & Space Company, Sunnyvale, California.

change in relative phase as well as direction in a manner similar to the change undergone by one's image in a mirror. While the image in the mirror has its left and right sides interchanged, the top and bottom of the image remain the same as in the original object. This same principle accounts for one advantage of circular polarization; a transmitting circularly-polarized antenna illuminating a reflector is isolated from the reflected energy. For example, the central feed antenna on a parabolic reflector transmits energy which is reflected by the parabola. Some of the energy is reflected back into the feed, posing an interference problem. If the feed is circularly polarized, the reflected energy will also be circularly polarized, but in the opposite direction. That is, if the primary polarization is right-hand, the secondary or reflected polarization will be left-hand. Thus, the secondary radiation will not interfere with the primary radiation.

Poincaré Sphere

The Poincaré sphere is a graphical aid to the visualization of polarization. In this representation, the polarization of a wave corresponds to a position on a sphere, as shown in Figure 8. The development and use of the concept of the Poincaré sphere is too complex for discussion in this article, but the visual representation of the sphere may help the reader bring the concept of polarization into perspective. A complete discussion of this concept will be found in reference 1.

Polarization Measurements

The polarization characteristics of a wave can be measured in a variety of ways. If the axial ratio of the polarization ellipse is all the information that is required, then the measurement is simply made using the "spinning-dipole" method, where a linearly polarized antenna is spun in the plane of polarization, and the variation in signal level is recorded (see Figure 9). If, during this process, the antenna under test is rotated in azimuth at an angular rate much slower than the dipole is spinning, then the axial ratio as a function of azimuth angle is recorded. Such a pattern is shown in Figure 10. This pattern may be repeated at various frequencies over the bandwidth of the antenna.

If the sense of polarization is required, then an antenna of known right- or left-hand circular polarization is used to illuminate the antenna under test, and relative received amplitude is recorded and compared (see Figure 11).

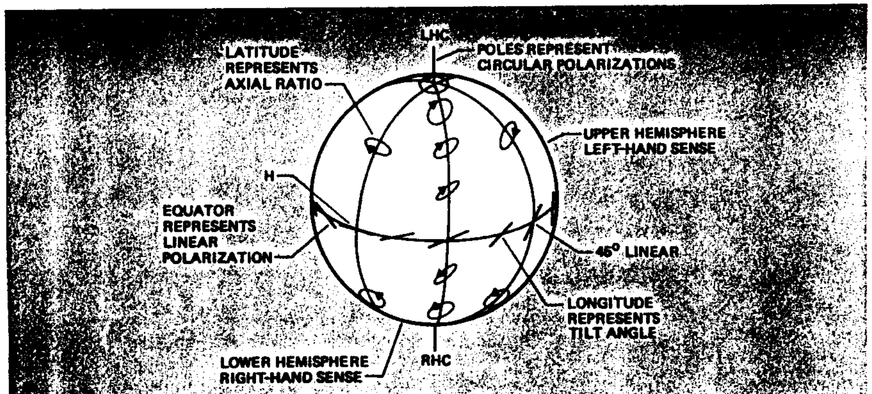

Figure 8. Poincaré sphere.

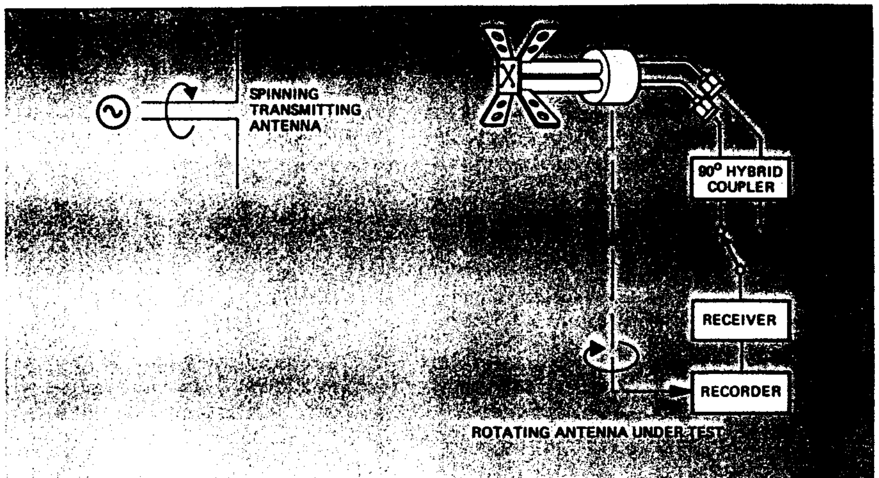

Figure 9. Pattern measurement.

A third technique (not illustrated) for measuring polarization, while laborious and, therefore, seldom used, yields maximum information. With this method, the vertical and horizontal components of the wave are measured for both relative amplitude and relative phase. From the data obtained, the axial ratio, tilt angle and sense of polarization can be calculated.

For testing of most general-purpose receiving antennas, the first method discussed is adequate.

Polarization Mismatch

As previously discussed, an antenna's polarization is demonstrated by the polarization of the wave produced when transmitting or by the wave which produces maximum energy at the receiver antenna terminal. When antenna gain is specified or tested, the assumption is generally made that the polarization of the field is optimum; that is, the characteristic polarization of the antenna and the field in which it is measured are the same. If the

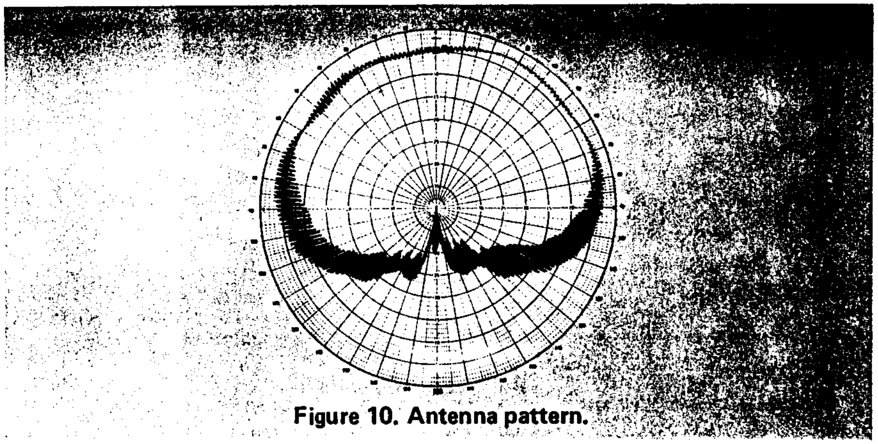

Figure 10. Antenna pattern.

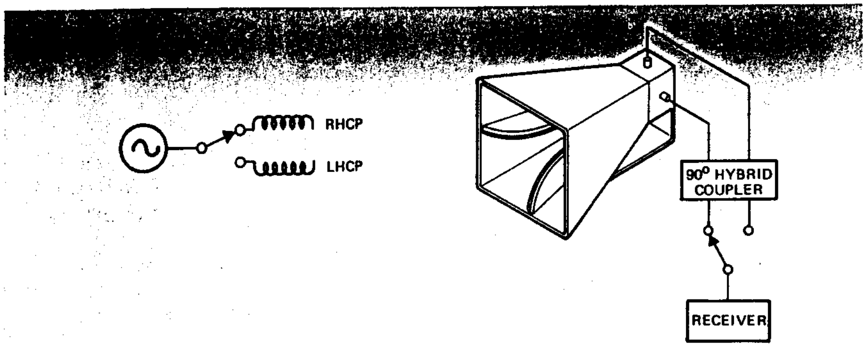

Figure 11. Polarization measurement.

wave is polarized differently than the antenna receiving it, then the power available at the antenna terminals will be less than maximum. Loss resulting from polarization mismatch can be any value between infinity and zero. Losses associated with some of the more common polarization mismatches are shown in Figure 12. Attenuation for the six polarizations listed is based on the polarization being either purely linear or purely circular.

Note that an antenna of any polarization is blind, or cross-polarized, to one other polarization. A given antenna may radiate different polarizations in different directions, but in a specific direction there is always one polarization which it cannot transmit or receive.

ANTENNA POLARIZATION	WAVE POLARIZATION					
	VERTICAL ↑	HORIZONTAL →	RIGHT HAND CIRCULAR ↻	LEFT HAND CIRCULAR ↺	RIGHT SLANT LINEAR ↗	LEFT SLANT LINEAR ↖
VERTICAL ↑	0 dB	∝	3 dB	3 dB	3 dB	3 dB
HORIZONTAL →	∝	0 dB	3 dB	3 dB	3 dB	3 dB
RIGHT HAND CIRCULAR ↻	3 dB	3 dB	0 dB	∝	3 dB	3 dB
LEFT HAND CIRCULAR ↺	3 dB	3 dB	∝	0 dB	3 dB	3 dB
RIGHT SLANT LINEAR ↗	3 dB	3 dB	3 dB	3 dB	0 dB	∝
LEFT SLANT LINEAR ↖	3 dB	3 dB	3 dB	3 dB	∝	0 dB

Figure 12. Polarization mismatch loss.

When the wave and the antenna are elliptically polarized, polarization mismatch loss is more difficult to determine. To this end, the equations given in Figure 13 have been developed and may be used for calculating the polarization mismatch loss between two widely separated antennas in freespace in the absence of intervening reflections.

Conclusion

It should be evident from this discussion that circular polarization is more difficult to produce than linear polarization. From a systems point of view, circular polarization requires greater care to ensure proper use. Circular polarization, however, finds a primary application in situations where it is necessary to receive signals whose polarization is unknown, such as with reconnaissance or surveillance systems. As most transmissions are of either

Case: ↔ (Polarizations)	X = Polarization Mismatch Loss (in + db) =
⬯ Ellipse ↔ Ellipse ⬯	$-10\log_{10}\left\{\tfrac{1}{2}+\tfrac{1}{2}\left[\dfrac{4\gamma_T\,\gamma_R+(1-\gamma_T^2)(1-\gamma_R^2)(\text{Cos }2\beta)}{(1+\gamma_T^2)(1+\gamma_R^2)}\right]\right\}$ (2)
⬯ Ellipse ↔ Linear /	$-10\log_{10}\left\{\tfrac{1}{2}-\tfrac{1}{2}\left[\dfrac{(1-\gamma_E^2)\quad(\text{Cos }2\beta)}{(1+\gamma_E^2)}\right]\right\}$ (3)
⬯ Ellipse ↔ Circular ⊙	$-10\log_{10}\left\{\tfrac{1}{2}+\tfrac{1}{2}\left[\dfrac{2\gamma_C\gamma_E}{(1+\gamma_E^2)}\right]\right\}$ (4)
\ Linear ↔ Linear /	$-10\log_{10}\left\{\tfrac{1}{2}+\tfrac{1}{2}\left[\dfrac{(\text{Cos }2\beta)}{1}\right]\right\}$ (5)
\ Linear ↔ Circular ⊙	$-10\log_{10}\left\{\tfrac{1}{2}-\tfrac{1}{2}\left[\dfrac{0}{2}\right]\right\} = +3\text{ db}$ (6)
⊙ Circular ↔ Circular ⊙	$-10\log_{10}\left\{\tfrac{1}{2}+\tfrac{1}{2}\left(\gamma_{TC}\,\gamma_{RC}\right)\right\} \begin{array}{l} = 0\text{ db. When }\gamma_{TC}=\gamma_{RC} \\ = +\infty\text{ db. When }\gamma_{TC}=-\gamma_{RC}\end{array}$ (7)
Where:	γ = Ellipticity Ratio, the signed voltage ratio of the major axis of the polarization ellipse to its minor axis, where $(1 \leq \lvert\gamma\rvert \leq \infty)$. β = Polarization Mismatch Angle, $(0^\circ \leq \beta \leq 90^\circ)$. T means Transmitting; R means Receiving. E means Elliptically Polarized; C means Circularly Polarized.

Note: Equations 1 through 7 are from Air Force Test Range Technical Report AF WTR-TR-65-1, by Benhring W. Pike, P.E.

Figure 13. Equations for polarization mismatch loss.

vertical or horizontal polarization, circularly polarized receiving antennas will receive either one. Airborne vehicles, such as missiles, usually transmit telemetry data via linearly polarized antennas; a circularly polarized antenna on the ground can usually receive the signals despite the ever-changing attitude of the missile.

The newest use of circular polarization is in the "frequency re-use" technique employed in satellite communications. With this technique, two signals at the same frequency are each independently modulated and transmitted via antennas of opposite sense of circular polarization which, therefore, causes the antennas to be isolated from each other. Similar antennas on the ground separately receive the two transmissions, thus allowing the same frequency to be used twice.

For further reading on the subject of polarization, the reader is encouraged to consult the references given in this article. The glossary appearing at the end of this article also contains IEEE definitions of various terms associated with polarization.

Glossary*

*The terms in this Glossary are reprinted from IEEE Standard 145-1973, by permission of The Institute of Electrical and Electronics Engineers, Inc.

axial ratio. The ratio of the axes of the polarization ellipse. Note: See Note (3) under polarization of a field vector.

circularly polarized field vector. A field vector for which the polarization ellipse is a circle.

circularly polarized plane wave. A plane wave in which the electric field is circularly polarized.

cross polarization. The polarization orthogonal to a reference polarization. Note: Two fields have orthogonal polarizations if their polarization ellipses have the same axial ratio, major axes at right angles, and opposite senses of rotation.

elliptically polarized field vector. A field vector whose extremity describes an ellipse as a function of time. Note: Any single-frequency field vector is elliptically polarized if "elliptical" is understood in the wide sense as including circular and linear. Often, however, the expression is used in the strict sense meaning noncircular and nonlinear.

elliptically polarized plane wave. A plane wave in which the electric field is elliptically polarized.

E plane, principal. For a linearly polarized antenna, the plane containing the electric field vector and the direction of maximum radiation.

helical antenna. An antenna whose configuration is that of a helix. Note: The diameter, pitch, and number of turns in relation to the wavelength provide control of the polarization state and directivity of helical antennas.

horizontally polarized field vector. A linearly polarized field vector whose direction is horizontal.

horizontally polarized plane wave. A plane wave in which the electric field is horizontally polarized.

H plane, principal. For a linearly polarized antenna, the plane containing the magnetic field vector and the direction of maximum radiation.

isolation between antennas. A measure of power transfer from one antenna to another. Note: The isolation between antennas is the ratio of power input to one antenna to the power received by the other usually expressed in decibels.

isotropic radiator. A hypothetical antenna having equal radiation intensity in all directions. Note: An isotropic radiator represents a convenient reference for expressing the directive properties of actual antennas.

linearly polarized field vector. A field vector for which the polarization ellipse is a line segment.

linearly polarized plane wave. A plane wave in which the electric field is linearly polarized.

plane of polarization. A plane containing the polarization ellipse. Notes: (1) When the ellipse degenerates into a line segment, the plane of polarization is not uniquely defined. In general, any plane containing the segment is acceptable, however, for a plane wave in an isotropic medium, the plane of polarization is taken to be normal to the direction of propagation. (2) In optics the expression *plane of polarization* is associated with a linearly polarized plane wave (sometimes called a plane polarized wave) and is defined as a plane containing the field vector of interest and the direction of propagation. This usage would contradict the above one and is deprecated.

plane wave. A wave in which the only dependence of the field vectors on position is through the same exponential factor whose exponent is a linear function of position. See polarization of a plane wave.

polarization of an antenna. In a given direction, the polarization of the wave radiated by the antenna. Alternatively, the polarization of a plane wave incident from the given direction which results in maximum available power at the antenna terminals. Notes: (1) The polarization of these two waves is the same in the following sense. In the plane perpendicular to the direction considered, their electric fields describe similar ellipses. The sense of rotation on these ellipses is the same if each one is referred to the corresponding direction of propagation, outgoing for the radiated field, incoming for the incident plane wave. (2) When the direction is not stated, the polarization is taken to be the polarization in the direction of maximum gain.

polarization of a field vector. For a field vector at a single frequency at a fixed point in space, the polarization is that property which describes the shape and orientation of the locus of the extremity of the field vector and the sense in which this locus is traversed. Notes: (1) For a time harmonic (or single-frequency) vector, the locus is an ellipse with center at the origin. In some cases, this ellipse becomes a circle or a segment of a straight line. The polarization is then called, respectively, circular and linear. (2) The orientation of the ellipse is defined by its plane, called the plane of polarization, and by the direction of its axes. (For a linearly polarized field, any plane containing the segment locus of the field vector is a plane of polarization.) (3) The shape of the ellipse is defined by the axial ratio (major axis)/(minor axis). This ratio varies between infinity and 1 as the polarization changes from linear to circular. Sometimes the ratio is defined as (minor axis)/(major axis). (4) The sense of polarization is indicated by an arrow placed on the ellipse. Alternatively, if the observation is made from a particular side of the plane of polarization the sense can be qualified as clockwise or counterclockwise. It can also be called right hand (or left hand) if, when placing the thumb of the right hand (or left hand) in a specified reference direction normal to the plane of polarization, the sense of travel on the ellipse is indicated by the fingers of the hand. (5) The field vector considered may be the electric field, the magnetic field, or any other field vector, for example, the velocity field in a warm plasma.

polarization of a plane wave. The polarization of a specified field vector in the plane wave. Notes: (1) It is the convention in electrical engineering to specify the polarization of the plane wave by that of the electric field vector. (2) In a isotropic medium, the plane of polarization is the plane perpendicular to the direction of propagation. It is the convention in electrical engineering to describe the sense of polarization at a fixed point in space as right hand (clockwise) or left hand (counterclockwise) by choosing the direction of propagation as the reference direction. See Note (4) under polarization of a field vector. (3) The polarization of a plane wave is the same at every point in space.

polarization ellipse. The locus of the extremity of a field vector at a fixed point in space. Note: See Notes (1) through (4) under polarization of a field vector.

radar cross section. For a given polarization of the incident wave, that portion of the scattering cross section of a target associated with a specified polarization component of the scattered wave. See scattering cross section; equivalent flat plate area of a scattering object.

radiation pattern (antenna pattern). A graphical representation of the radiation properties of the antenna as a function of space coordinates. Notes: (1) In the usual case the radiation pattern is determined in the far field region and is represented as a function of directional coordinates. (2) Radiation properties include power flux density, field strength, phase, and polarization.

right-hand (or left-hand) polarization of a field vector. A polarization such that the sense of rotation of the extremity of the field vector with time is in the direction of the fingers of the right hand (or left hand) when the thumb of that hand is in some reference direction perpendicular to the plane of polarization. Note: For a linearly polarized field vector the sense of polarization is not defined.

right-hand (or left-hand) polarization of a plane wave. The polarization of plane wave when the electric field vector is right-hand (or left-hand) polarized, taking as the reference the direction of propagation.

spiral antenna. An antenna consisting of one or more conducting wires arranged as a spiral. Note: Spiral antennas are usually classified according to the surface to which they conform, that is, conical spiral or planar spiral, and according to mathematical form such as equiangular and Archimedean.

vertically polarized field vector. A linearly polarized field vector whose direction is vertical.

vertically polarized plane wave. A plane wave in which the electric vector is in the vertical plane containing the direction of propagation.

References

1. Hallis, J. S., Lyon, T. J. and L. Clayton, Jr., Editors. *Microwave Antenna Measurements.* Atlanta, Georgia: Scientific-Atlanta, Inc., July 1970.
2. "IEEE Standard Definitions of Terms for Antennas," *Antenna Standards and Propagation Group,* IEEE Standard 145-1973.
3. Pike, Beuhring W., *Power Transfer Between Two Antennas with Special Reference to Polarization,* Vanderberg Air Force Base, California: Air Force Systems Command, December 1965. AD637 134, Technical Report AF WTR-TR-65-1.
4. Reed, Henry R. and Carl W. Russell, *Ultra-High Frequency Propagation,* Cambridge, Massachusetts: Boston Technical Publishers, Inc., 1966.

Author: John E. Hill

Mr. Hill became a member of the technical staff at W-J's Recon Division in 1970, and is currently Manager, Antenna Department. Mr. Hill brought to W-J extensive experience in the field of telemetry and direction-finding antennas in both ground and airborne applications. His current activities include the development and application of antennas for surveillance and direction-finding systems. Mr. Hill received his BA degree from Occidental College in 1951, and is a member of the Association of Old Crows.